Contents

1 Subject of specification 2
2 Scope of validity 2
2.1 Deviations 2
3 Documents hierarchy 2
4 Description 2
4.1 Environment requirements: 2
4.2 General requirements: 3
4.3 Equipment that creates potential fire source 3
4.4 Types of passive fire protection of steel structures 4
4.5 Range of fireproofing application 4
4.6 Fireproofing 5
4.7 Application methods 12
4.8 The range of fireproofing applications for specific steel structures 14
5 Codes and standards 19
6 Index of revisions 20

Opracowanie jest własnością Grupy LOTOS SA i nie może być reprodukowane ani udostępniane osobom trzecim w całości lub w części bez pisemnej zgody Grupy LOTOS SA

1 Subject of specification

This specification used in conjunction with Standard Technical Specifications of the LOTOS Group establishes the minimum requirements for the design and application of fireproofing.

2 Scope of validity

This specification applies to the preparation of tender documents, inquiries and contracts concerning new investments and modernisation projects planned by LOTOS Group.

It shall also be a basis for preparing detailed specifications and inquiries for individual or package supplies.

2.1 Deviations

Any deviation from this specification and the relevant specifications, standards and related documents including proposals, which the bidders claims to be economically and / or technically superior solutions must be submitted in writing for review and approval by LOTOS Group. Non-approved exceptions are not acceptable by LOTOS Group.

The supplier must report in writing any ambiguity in this or any other specifications of LOTOS Group or non-compliance with the referred documents / standards and obtain a written explanation of LOTOS Group.

3 Documents hierarchy

In case of conflicts existing between this specification and other documents, the following order of precedence shall govern:

- The current Polish legislation,
- Terms of purchase order / contract and other requirements agreed in writing with GLSA,
- Data Sheets approved by GLSA,
- This specification,
- Other specifications,
- Drawings and others documentations,
- Standards.

4 Description

4.1 Environment requirements:

- Atmosphere: marine, aggressive industry, chemical, dust,
- Ambient temperature (max/min): +36 °C / -25 °C,
- Relative humidity (max/min): 90 % / 70 %,
- Ground elevation: 1 m above sea level,
- Wind speed: 26 m/s,
- Operating conditions: refinery, seaside,

- Prevailing wind directions: from south and south-west.

4.2 General requirements:

- Buildings and steel structures for equipment shall be designed and fabricated to ensure the following in case of fire:

- load-carrying ability of the structure for a specific time,
- evacuation of persons,
- rescue operation.

- Currently valid regulations define 5 classes of fire resistance – these are periods when a structure can still work in a fire, and they are respectively:

Fire resistance class	Fire resistance (minutes)
A	240
B	120
C	60
D	30
E	15

Determination of the fire resistance of a building depends on the fire load value and the category of danger to persons.

For process installations, conditions that are the subject of the specification shall be established.

4.3 Equipment that creates potential fire source

4.3.1 The following equipment shall be considered a potential fire source:

- storage tanks, heat exchangers, pressure tanks including flammable substance exceeding 2 tons,
- air coolers including flammable substance exceeding 1 ton,
- equipment of a capacity exceeding of 5 m^3/h containing liquids, vapours or both, of one of the following parameters:
  - a temperature higher than the auto ignition temperature,
  - a temperature in the area of the potential fire equal to or higher than the temperature of ignition of the supplied or stored liquid, and when there is an open-fire zone in this area,
  - outdoor switchgears.

4.3.2 The required fire resistance class for particular elements of steel structure, the required thickness of fireproofing insulation.

For all elements of steel structure, that are the subject to fireproofing the required fire resistance class shall be R 120 in hydrocarbon fire conditions.

Fireproofing insulation thickness shall be selected for individual elements of the steel structure in accordance with the tables in Technical Approvals of Building Techniques Institute-ITB.

4.4 Types of passive fire protection of steel structures

Allowed for use in LOTOS Group refinery shall be all system which meet formal requirements i.e. all that are allowed for sale and use in the territory of Poland for fireproofing of steel structures in hydrocarbon fire conditions (which have the appropriate Technical Approvals and Conformity Certificates permitting this type of application).

4.5 Range of fireproofing application

4.5.1 Technological Pipe bridges and independent pipe supports

Subject to fireproofing are all elements that are part of the main supporting structure of pipe bridges, i.e. pillars, beams, bracing within 10 m from the potential source of fire and up to a height of 9 m.

The steel structure of individual, independent pipe supports require fireproofing up to a height of 9 m if they are located within 10 m from the potential fire source and also if special operating or load conditions occur, that is, if one or more of the below listed criteria occur:

- the pipe supported on the support is a collector leading to a flare or an outlet line from a safety valve,
- the pipe supported on the support contains a toxic product,
- the pipe supported on the support is connected to equipment which would be seriously damaged by an additional load on the connector pipe in case the pipe support is lost,
- the pipe supported on the support runs below the air cooler whose steel support structure is fireproofed (including horizontal elements),
- the pipe supported on the support is an instruments-air line or a hydraulic instruments-system line, used to control the process and enabling installation shutdown.

4.5.2 Racks supporting process equipment

Subject to fireproofing are all elements that are part of the main supporting structure of the rack, i.e.: pillars, beams, bracing within 10 m from the potential fire source and up to a height of 9 m.

If there is an impenetrable floor, for instance one made of reinforced concrete, under the piece of equipment which can be a source of fire, then the stated height of the necessary fireproof protection of 9 m of the surrounding steel structures shall be counted from the surface of this floor.

4.5.3 Skirts of vertical vessels and columns

All steel skirts of columns and other vertical vessels located within 10 m from the potential fire source shall be fireproofed on the whole height. Skirts of a diameter more than or equal to 1 m shall be fireproofed both on the inside and on the outside. For skirts of a diameter less than 1 m fireproofing shall be made only on the outside.

For the skirts of columns, reactors and vertical tanks located at a distance of more than 10 m from the potential source of fire there shall be no need of fireproofing unless there are special operating conditions or load conditions, i.e. if one or more of the below described criteria occurs:

- the total mass of the column, reactor or vessel (including the contents) is more than 10 tons,
- the column, reactor or vessel contains a toxic product,
- a breakdown may lead to consequences beyond damage to property, including damage to the environment.

4.5.4 Air cooler supports

Subject to fireproofing are all elements that are part of the main supporting structure, i.e.: pillars, beams, bracing within 10 m from the potential fire source and up to a height of 9 m.

All elements that are part of the main supporting structure of coolers require fireproofing on the whole height, if there are special operating or load conditions, i.e. if one or more of the below described criteria occurs:

- the air cooler contains as a whole more than 1 ton of an flammable product,
- one or more air coolers are installed on one storey and the total mass of the coolers and their contents exceeds 2.5 tons.

4.5.5 Saddles of horizontal vessels

All saddles of horizontal vessels of a height of minimum 300 mm at the lowest point, founded within 10 m from the potential fire source and below 9 m height shall be fireproofed on the whole surface. If there is an impenetrable floor, for instance one made of reinforced concrete, under the equipment that can be a source of fire, then the stated height of the necessary 9 m fireproof protection of the surrounding steel structures shall be counted from the surface of this floor.

4.5.6 Other steel structure elements

Steel structures listed below shall be fireproofed regardless of their location with respect to the fire hazard zone:

- Pillars that support a heater – the full height from the footing level. All structural elements introduced in order to reduce the length of the effective buckling of those pillars shall be also fireproofed,
- The supporting structure that supports compressors and equipment shall have fire resistance of minimum R 120 while the steel structure of the roof over the compressor shall have fire resistance of minimum R 60. Subject to fireproofing are all structural elements, that is: pillars, beams, bracing,
- The supports of spherical tanks shall be fireproofed from the support footing to the top of the support on which the tank lugs rest. Subject to fireproofing are all structural elements, which are: pillars, beams, bracing,
- The supports of all pipelines located on the retaining trays of storage and handling tanks. Subject to fireproofing are all structural elements, which are: pillars, beams, bracing.

4.6 Fireproofing

4.6.1 Requirements for the contractor

Contractors who want to be awarded contracts for fireproofing work in LOTOS Group's premises shall have a license for providing such services issued by the manufacturer of the given system or by its representative in Poland. In addition, all contractors applying for contracts for that type of work shall have experience in the execution of such contracts, documented by references. If a many years guarantee is demanded from the contractor (for this type of work guarantees are typically given for 36 to 60 months) it shall be necessary to inspect the credibility (both professional and financial) of all bidders in great detail.

Fireproofing load should be taken into account during steel structure stress calculations.

4.6.2 Necessary tests

Fire protection systems used in LOTOS Group's refinery must have valid documents allowing them to be used on the Polish market. At present such documents are ITB's Technical Approval and Certificate of Conformity. Note that the Technical Approval issued for a given steel structure fireproof system

must allow its use in hydrocarbon fire conditions. According to the currently valid test procedure fireproof systems used in petrochemical facilities must be tested according to the hydrocarbon curve defined in PN-EN 1363-2:2001. Systems which do not have admittance (an appropriate entry in the Technical Approval) for use in hydrocarbon fire conditions shall not be used for fireproofing in LOTOS Group's refinery (this applies to gunite systems, panel-type protective systems, swelling paints and concrete).

4.6.3 Protection against damage or soiling

All technical equipment in the immediate vicinity of the fireproofing work site must be protected against getting dirty by covering with canvas or a plastic wrap.

Existing boxes, panels, cable trays, light covers and other equipment mounted on the structure must be protected against getting damage during fireproofing works.

4.6.4 Dirt removal

If equipment gets dirty during fireproofing, it must be cleaned as soon as the work is completed.

4.6.5 Methods for fireproofing steel structures and for the application of fireproofing

The fireproofing must be permanently attached to the steel element. The most effective method ensuring a permanent co-functioning of a steel element with fireproofing insulation is to permanently fix (e.g. by welding) steel studs to the structure and then to attach to them steel mesh which is the inside reinforcement of the fireproofing insulation. For shapes of small cross-section dimensions (the height of the web of the given steel section not more than 300 mm) it shall be allowable to make fireproofing insulation on the outside contour of the section (the possibility of using such solution must be written in the ITB's Technical Approval). A fireproofing made in this way has the shape of a rectangular prism.

4.6.6 Examples of ways of fireproofing application on steel structures are shown in the drawings below:

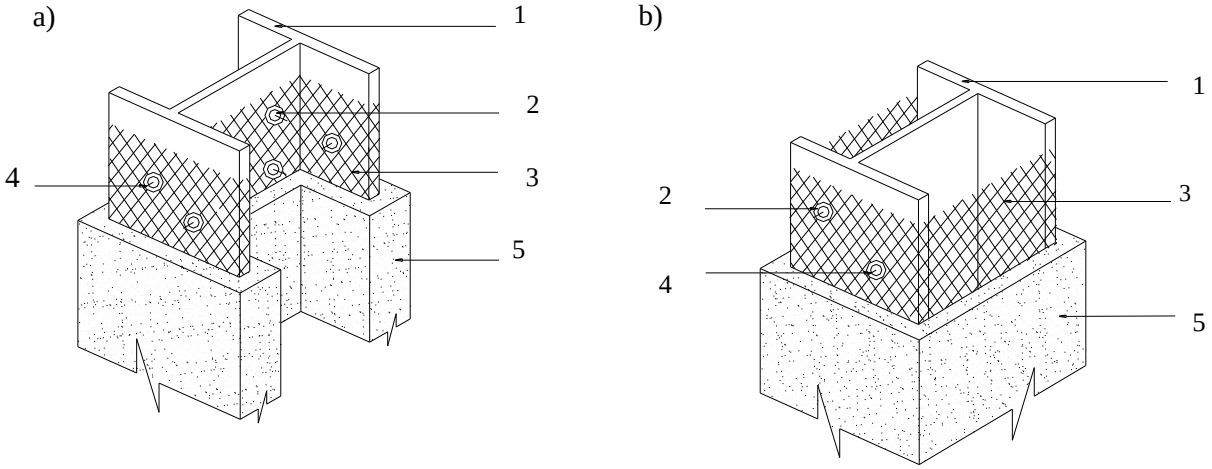

Drawing description:

1 – steel pillar
2 – crown-caps
3 – steel mesh
4 – steel studs
5 – fireproofing insulation

Fig.1 Examples of ways of fireproofing application on double-tees steel pillars:
a) mesh installation on the profile surface/shape,
b) mesh installation in form of a box for elements of web height not exceeding 300 mm.

a)

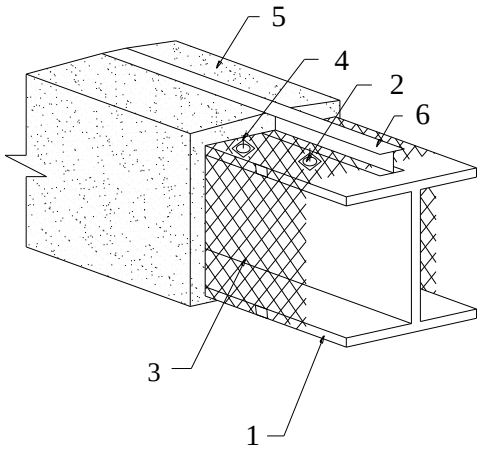

Drawing description:

1 – steel beam
2 – crown-caps
3 – steel mesh
4 – steel studs
5 – fireproofing insulation
6 – spacer section which allows to arrange additional elements on the beam

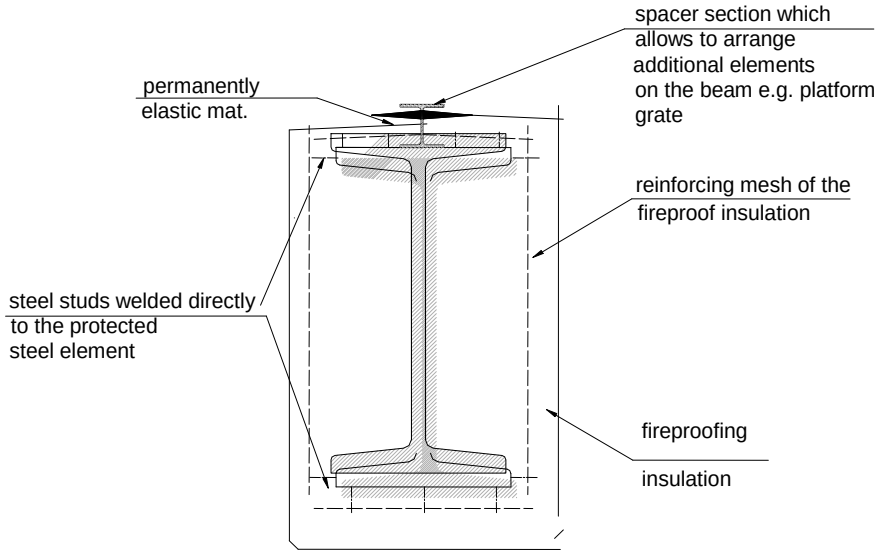
spacer section which
allows to arrange
additional elements
on the beam e.g. platform
grate
permanently
elastic mat.
reinforcing mesh of the
fireproof insulation
steel studs welded directly
to the protected
steel element
fireproofing
insulation

b)

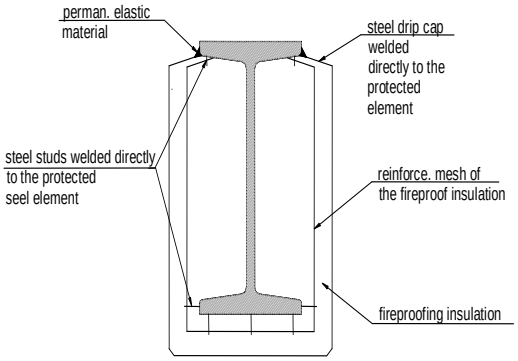
perman. elastic
material
steel drip cap
welded
directly to the
protected
element
steel studs welded directly
to the protected
seel element
reinforce. mesh of
the fireproof insulation
fireproofing insulation

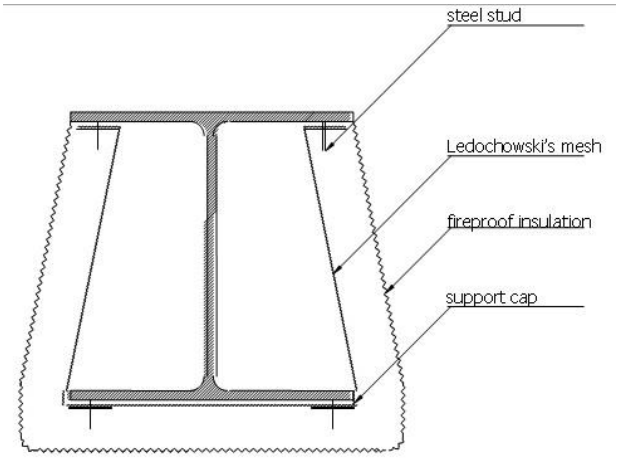
steel stud
Ledochowski's mesh
fireproof insulation
support cap

c)

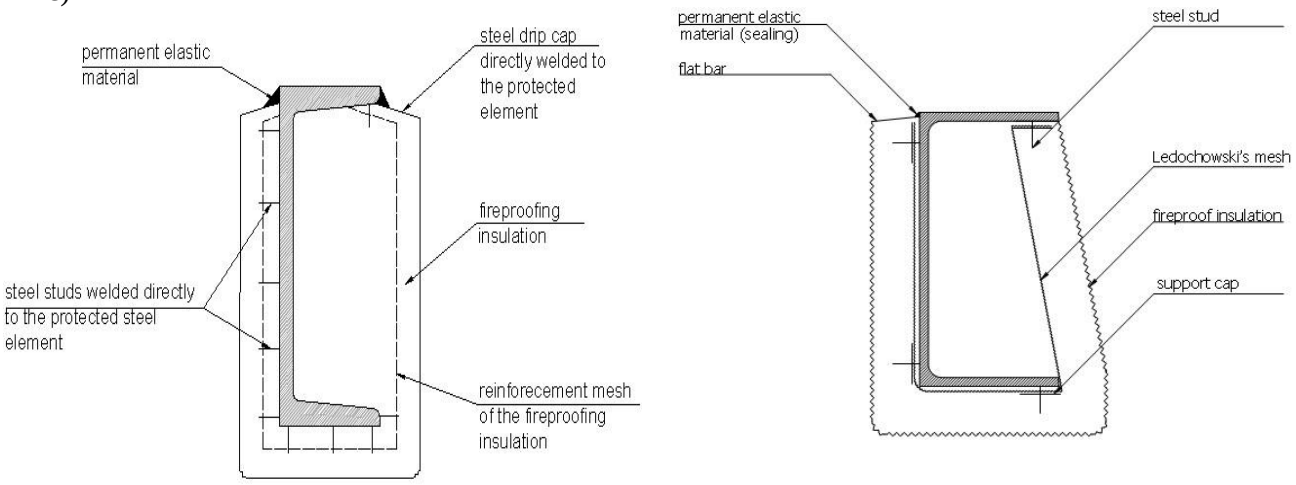

Fig. 2 Examples of ways of fireproofing application on steel beams of web height not more than 300 mm:
- a) steel double-T beam, on which working platforms will be placed,
- b) steel double-T beam, on which pipelines will be placed (the upper surface of the beam does not need to be fireproofed),
- c) steel channel beam , on which pipelines will be placed (the upper surface of the beam does not need to be fireproofed).

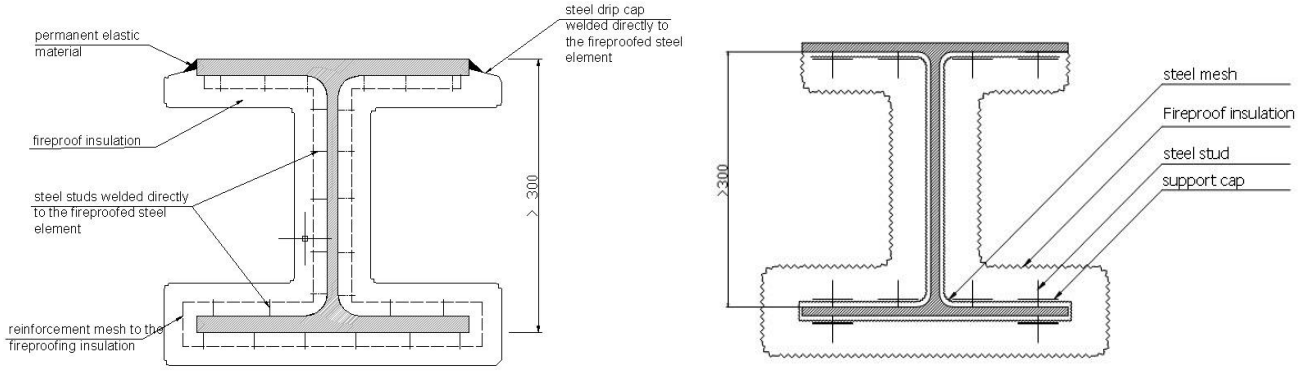

Fig. 3 An example of fireproofing application on a steel beam of web height more than 300 mm:
- steel double-T beam, on which pipelines will be placed (the upper surface of the beam does not need to be fireproofed).

a)

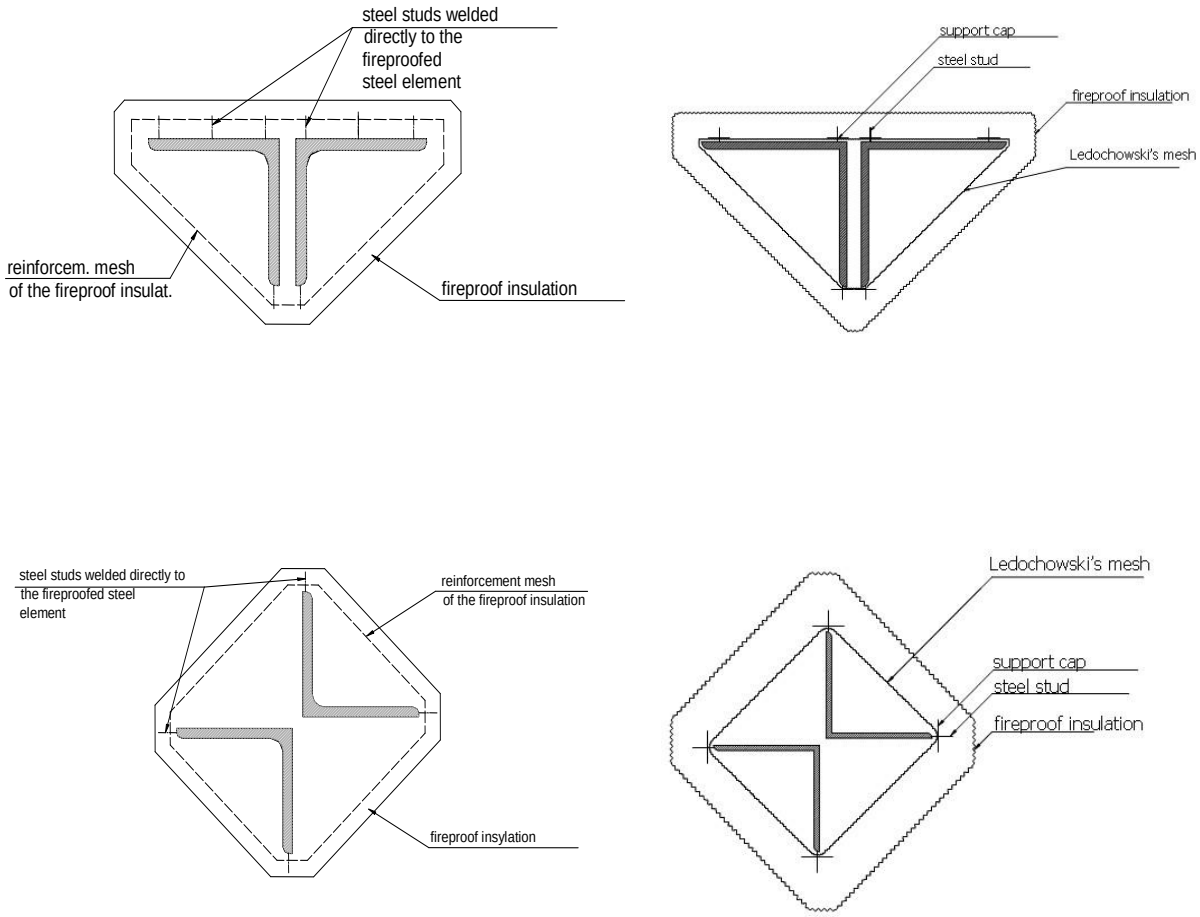

b)

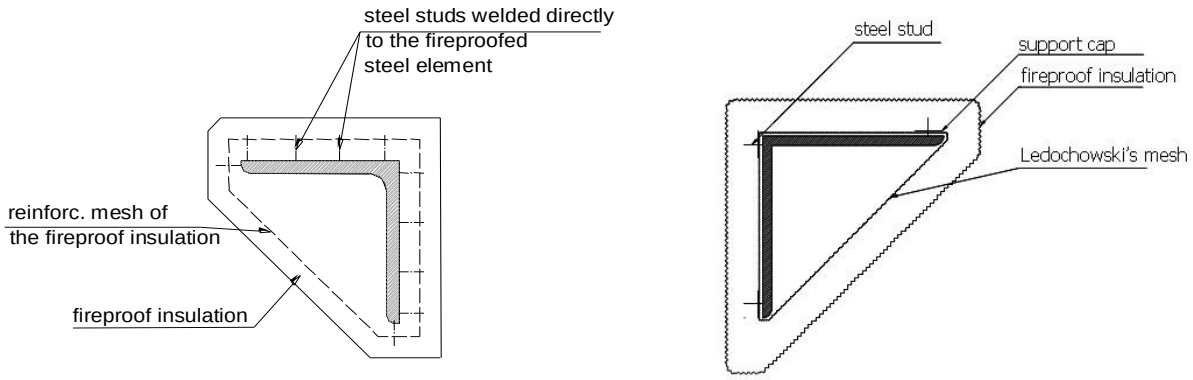

Fig. 4 Examples of ways of fireproofing application on steel elements made of angle irons:
a) steel elements consisting of two angles,
b) steel elements consisting of a single angle.

4.6.7 General requirements that should be met by the material used for fireproofing a structure

- The basic mechanical parameters that the fireproof insulation must at least meet:

Density, kg/m^3: - in naturally wet condition - in dry condition	 min. 500 min. 460
Bending strength, MPa	min. 0.45
Compression strength, MPa	min. 0.75
Adhesion to steel substrate protected with an anticorrosion coat, MPa: - dry - after being soaked	 min. 0.05 min. 0.05
Linear contraction, %	max. 0.3

- Peeling off the structure during a fire or coming off during an explosion

To prevent mechanical damage of fireproofing insulation (peeling off, tearing off) during a fire, and especially during an explosion, for sprayed systems based on a cement-vermiculite mix or wool-cement-vermiculite mix, it is necessary to permanently connect the fireproofing insulation with the steel element by fixing studs to the structure and by attaching a steel mesh sealed inside the fireproof protection.

- Corrosivity towards the steel

The steel substrate on which fireproofing is to be applied shall be protected with anticorrosion coats suitable for the appropriate environmental aggressiveness category. Aggressiveness of fireproof coating should be taken into account (strong alkaline mixtures).

Fireproofing systems used in LOTOS Group Refinery shall not adversely affect anticorrosion protections (this parameter should be confirmed by testing or by a relevant entry in ITB' Technical Approval).

- Maximum allowable temperature on the structure during a fire

Fireproofing insulation that has been applied on a structure shall guarantee that during 2 hours of a hydrocarbon fire the temperature of the fireproofed steel element shall not exceed 450^0C (critical steel temperature).

- Washing resistance

In case of steel structures on which sprinkler/spray equipment is installed and activated in case of fire a very important factor is the maintenance of durability and efficiency of the passive fireproofing protection of the steel structure affected by simultaneous impingement of fire and water.

In case of this type of structure, protection systems which in high temperature increase their volumes several times to form a fireproofing insulation, such as swelling paints, shall not be used. This type of fireproofing, when exposed to water released from the sprinkler/spray system, is totally washed away and do not fulfil its duty. It is recommended for the selected fireproofing system to undergo a test to confirm its efficiency when fire and water act on them simultaneously.

4.6.8 Guidelines concerning the performance and acceptance of the work

- Period for work execution

Fireproofing shall be done during rainless weather, when the temperature of the substrate to be insulated and the environment is not less than + 5 ^{0}C. If ITB's Technical Approvals issued for specific systems require additional conditions to be fulfilled during the performance of the work, they must be strictly complied with.

- Marking of a completed fireproofing

Information about the completed fireproofing shall be entered into the site logbook. The text of this information shall include at least the following:

- the name of the system used for fireproofing, stating ITB's Technical Approval number and ITB's Conformity Certificate number
- the fire resistance class of the fireproofed elements,
- the name of the company applying the fireproofing insulation,
- the date of application of the fireproofing insulation.

In addition, steel structures that have been fireproofed shall be permanently marked by means of legible plates containing the basic information about the applied fireproofing insulation.

Template of marking a fireproofed object:

Installation, object name:	Time of completion of the work:	
The system manufacturer (integrator):	Contractor:	
Materials used to make the fireproofing:	ITB's Technical Approval No.	ITB's Certificate of Conformity No.

4.7 Application methods

A description of the fireproofing method

- Steel element surface preparation

All surfaces to be fireproofed shall have an anticorrosion coat and they shall be carefully cleaned of dirt, oil, grease, falling-off paint and rust – everything that can reduce adhesion. The substrate surface must be compatible with or resistant to the spray-mix components.

- Installation of steel studs

Steel studs shall be installed in such way that the mesh that is stretched on them is distributed evenly on the surface of the elements. The length of the studs must be selected in such way that when the mesh has been put in place they do not stick out above the surface of the insulation. The studs must be installed to steel substrates by means of a pressure-welding machine, at intervals not bigger than 50 cm. After fixing each stud the anticorrosion coat must be repaired in the places of welding to prevent the formation of corrosion centres.

NOTE: If the fireproofed elements have mesh fasteners, the described actions can be omitted.

- Installation of the plaster-base net

The base net shall be mounted on all elements that are the subject to fireproofing. The net shall be stretched evenly on individual elements exactly over their contour. For sections of web height less than or equal to 300 mm the net can be fastened over the outside contour of the section (forming so called box) and insulation can be applied in the form of a rectangular prism (if such solution is allowed in the relevant Technical Approval).

The net shall be stretched on previously installed studs in such way that it adheres well to the surface of the element and does not stick out from it by more than ⅓ ÷ ½ of the insulation target thickness. Take care not to stretch the mesh to much and not to deform it.

- Fireproofing mix application

The fireproofing mix shall be applied on the surfaces to be insulated by means of special pumping-spraying units. Repairs of small damage to insulation can be done manually with traditional plasterer's tools.

The mix shall be applied coat by coat until the target total thickness is obtained. An insulation of fireproofing properties is ready when binding and hardening of the grout has been completed.

All work shall be performed at ambient temperature not lower than +5°C, without exposition to rain and mist.

In case it is necessary to carry out the work in winter time, enclosures shall be made and air inside it shall be heated.

In case the work must be performed during rain or if rain starts after the application of insulation and before it hardens, the place of work (or the applied insulation) shall be covered to protect it against rainwater.

- Protective coating

Steel structures that are the subject to fireproofing in LOTOS Group's Refinery are not protected from direct exposition to weather conditions (snow, rain, low temperatures etc.) and in addition they are exposed to aggressive environment. Therefore fireproofing insulation is exposed to moisture and damage. In order to prevent harmful action of weather conditions and to extend fireproofing insulation life it is necessary to consider adding topcoat paint system as surface protection. Use of polyurethane resin plastic-elastic coats is recommended – topcoat paints shall have ITB's Technical Approval, Certificate of Conformity and Material Safety Data Sheet.

Application of the protective coat may begin only when the fireproofing mix has completely bound, dried and hardened.

4.8 The range of fireproofing applications for specific steel structures

4.8.1 The scope of fireproofing for pipe bridges, racks, vessels supports etc.

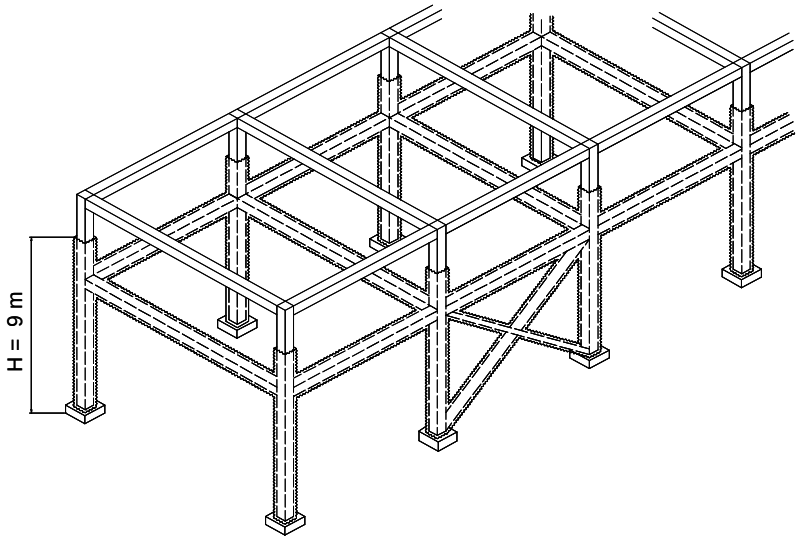

Fig. 5 The scope of application of steel structure fireproofing for objects located in the zone of potential impingement of the source of fire.

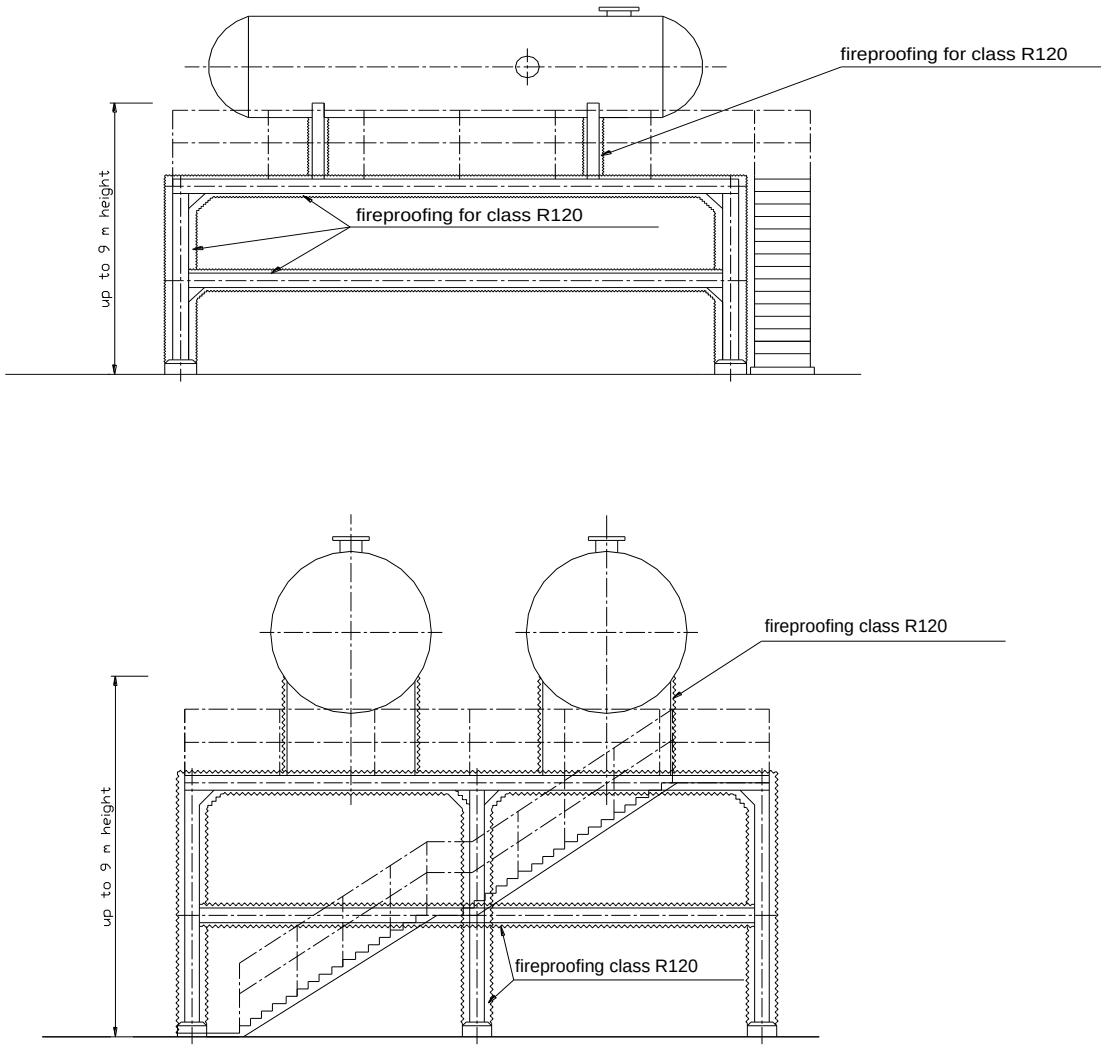

Fig. 6 The range of fireproofing applications for steel structures and supports of horizontal vessels.

a)

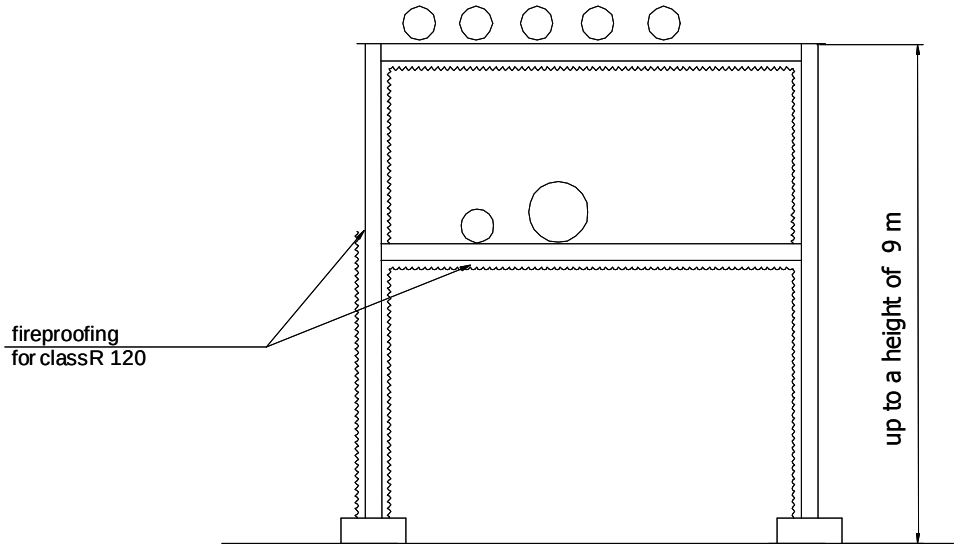
fireproofing
for classR 120
up to a height of 9 m

b)

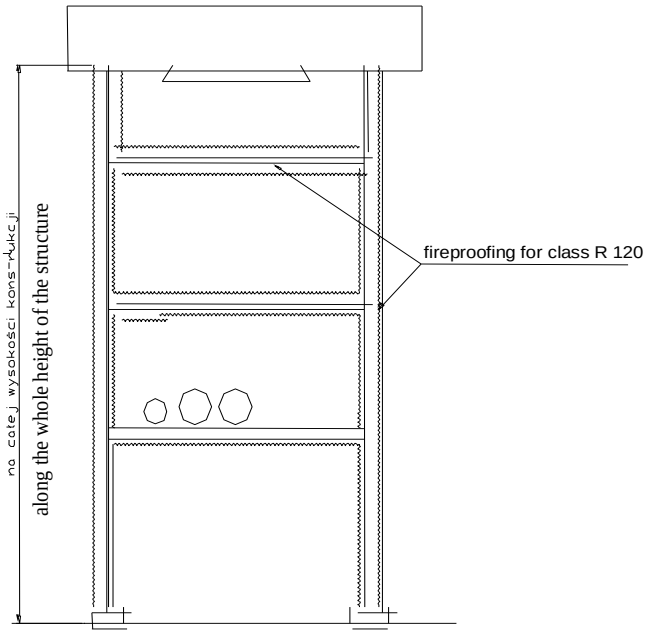
na całej wysokości konstrukcji
along the whole height of the structure
fireproofing for class R 120

c)

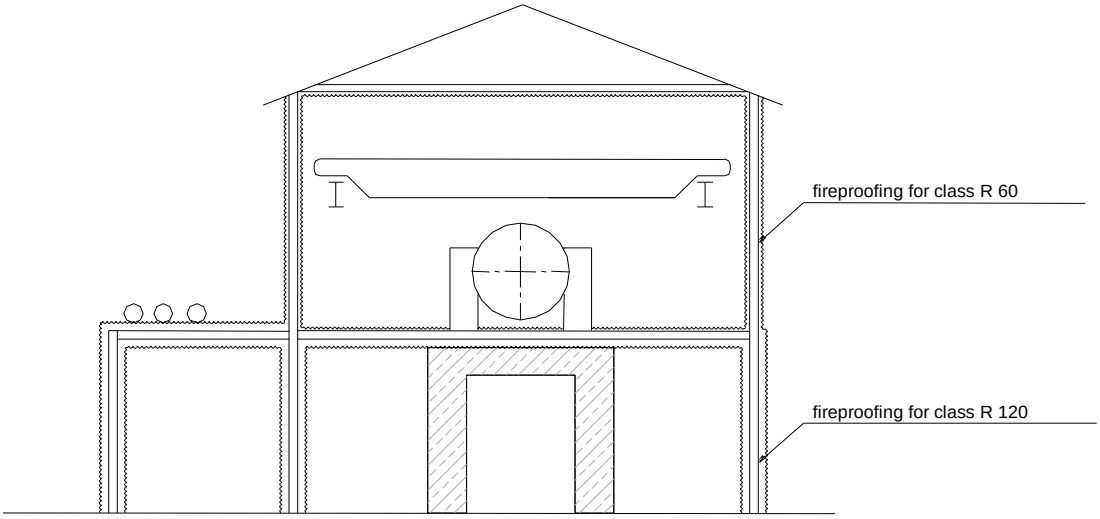

Fig. 7 The range of steel structure fireproofing applications for:
a) racks and pipe bridges,
b) air cooler structures,
c) compressor structures.

4.8.2 The range of fireproofing applications for the skirts of vertical vessels and columns

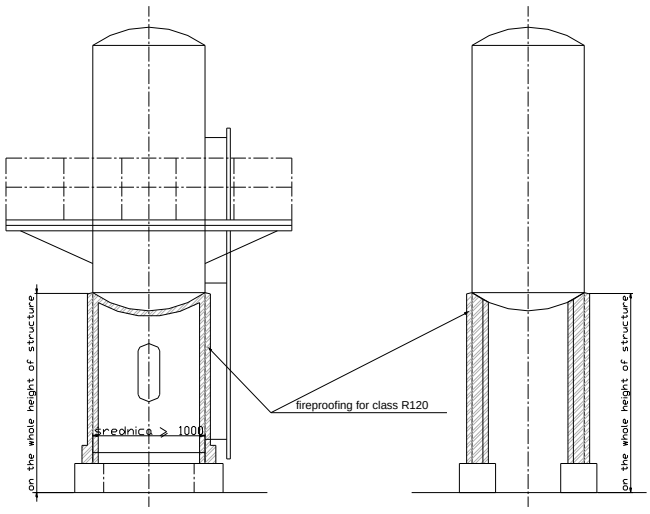

Fig. 8 The scope of application of fireproofing for the skirts of vertical vessels and columns in cases where they are located within ≤ 15 m from the potential source of fire

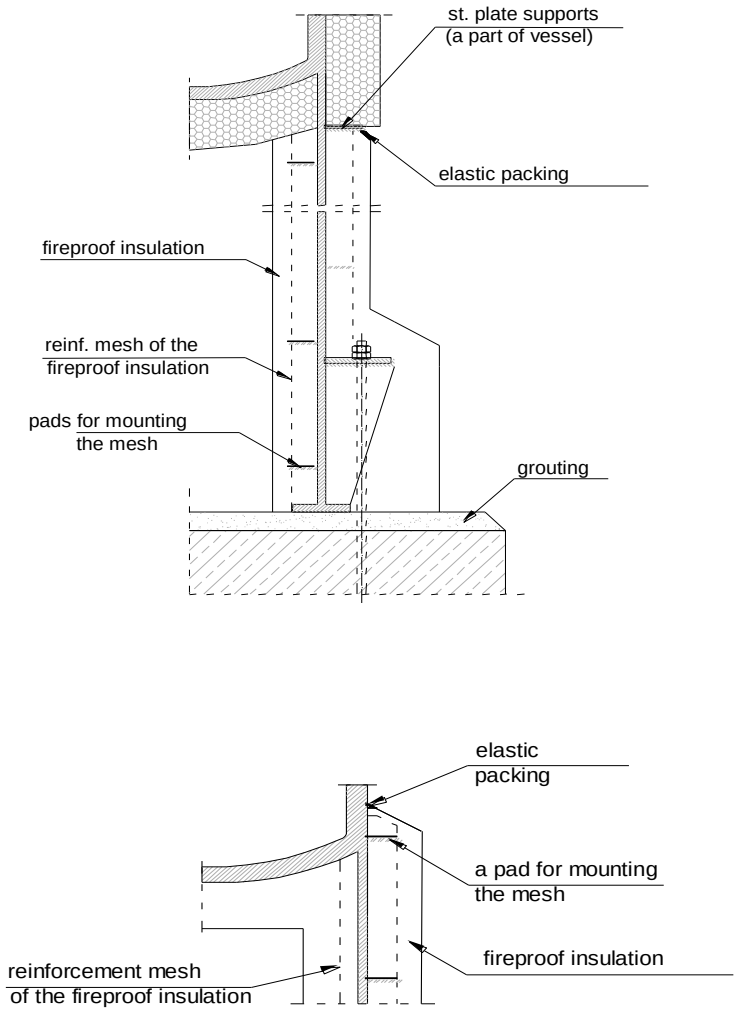

Fig. 9 A detailed solution of the fireproofing connection with the steel structure of vessel and column skirts.

5 Codes and standards

- UOP Standard Specification 9-14-1,
- Standard PN-EN 1363-1 Fire resistance tests. Part 1: General requirements,
- Standard PN-EN 1363-2 „Fire resistance tests. Part 2: Alternative and additional procedures,
- Standard PN-ENV 13381-4 Test methods for determining the contribution to the fire resistance of structural members. Part 4. Applied protection to steel members,
- The law of 16 April 2004 on building products (Journal of Law No. 92/2004, item 881),
- The Speaker of the Republic of Poland official announcement of 12 November 2010 on the uniform text of Polish Building Act (Journal of Law No. 243 item 1623),
- Regulation by the Minister of Economy of 21 November 2005 on the technical conditions to be met by liquid fuel tank farms and petrol stations, long-distance pipelines for conveying petroleum and petroleum products and their location (Journal of Law No. 243, Item 2063 as amended,
- Regulation by the Minister of Infrastructure of 12 April 2002 on the technical conditions to be fulfilled by buildings and their location (Journal of Law No. 75 of 2002, item 690) as amended,
- Regulation by the Minister of Infrastructure of 11 August 2004 on the methods of declaring the conformity of building products and the method of marking them with the building symbol (Journal of Law No. 198/2004 item 2041) as amended,
- API 2218, Fireproofing Practices in Petroleum and Petrochemical Processing Plants.

6 Index of revisions

Item	Date	Description	Introduced by
0		This specification supersedes in whole the previous LOTOS Group standard No. PR 07 280 identically titled.	Przemysław Kołodziejski
1	27.11.2006.	Updated the Regulations in the point 4.	J. Tyborowski
2	27.03.2007 (rev.2)	Corrections in para 3.2.1 Change of fireproofing height on fig 5, 6, 7a.	Przemysław Kołodziejski
3	30.11.2013 (rev.3)	Review, update, standardize and changes to the Standard within scope of order No. OK/990/2012.	Editorial board coordinated by T. Wróbel
-	31-08-2015	Page layout corrections, no contents changes.	T. Wróbel